SPECIFICATION SHEET

February 2005

22595

Shure-Lock² ™
CONTAINER # 22595
LID # 20095

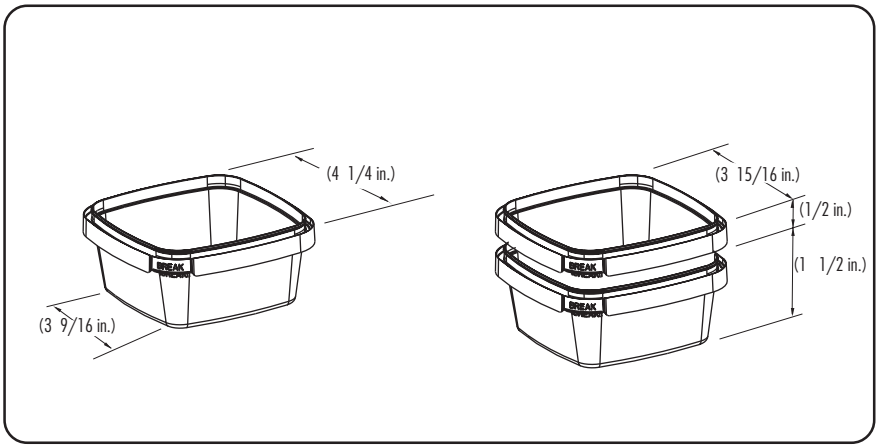

TECHNICAL DATA

Capacity under lid :
0.264 L / 8.93 US oz.

Wall thickness (approx.) :
Container: 0.62 mm (0.024 in.)
Lid: 0.56 mm (0.022 in.)

Thermal range : 0 °C (32°F) to 82 °C (180 °F)

5 PP

(Materials are recyclable or can be recovered for energy)

Materials : Container: polypropylene
Lid: polypropylene

Standard colors : clear, natural and white
other colors upon request

Weight (approx.) :
Container: 15.2 g (0.53 oz.)
Lid: 7.2 g (0.25 oz.)

PRINTING up to 8 colors for containers DRY OFFSET
up to 6 colors for lids.

CONTAINER

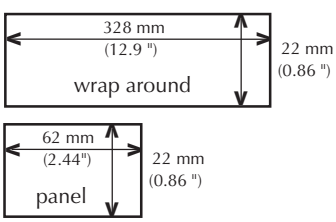

20095 LID

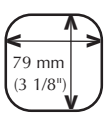

NOTE : lid dimensions are approx.

IN MOLD LABELING (LIDS ONLY)

In mold labeling process can be used for rich graphics

20095 LID

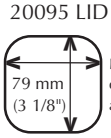

NOTE : lid dimensions are approx.

RECOMMENDATIONS

- IPL recommends to make necessary testing prior to full production.
- Staggered pattern is recommended for greater stability.
- Double faced pallets with close together boards on both sides are recommended for best results.
- To improve stability, release air from container when putting the lid.

OPENING AND CLOSING

TO OPEN: Break the Tamper-Evident tab, then remove lid.

TO CLOSE: Snap the lid at break tab area first, then follow all around while releasing air by pressing the center of the lid to burp container. If using a closing device, use proper burping devices.

Fillers, lid, pail denesters and lidding devices are also available in a variety of combinations.
Everything can be seen on brochures and video tape.
Live demonstration on site can be done on demand.

PACKAGING OF EMPTY CONTAINERS/LIDS

No double stacking, racking recommended.

Approved by:

Approvals: ..... Virgin materials are approved for food contact and meet FDA (Food and Drug Administration USA) and HPB (Health ProtectionBranch Canada) regulations.

Advise: ..... Handling conditions vary a lot from customer to customer, tests are recommended throughout the process of denesting, filling, conveying, palletization, warehousing, transportation and utilization by end users, etc. Specifications can be modified without notice. Please contact your IPL representative to confirm these data.

Quality Assurance: . IPL is ISO 9001 certified and quality procedures are documented in our quality system

Canada
IPL Plastics Ltd.
20 Boyd Street
P.O. Box 213
Edmundston, NB
Canada E3V-3K8
Tel : (506) 739-9559
Fax : (506)739-6185
Toll free (Service): 1-800-739-9595

USA
IPL PRODUCTS, LTD.
640 Lincoln Street
Worcester, MA 01605
Tel.:(508)351-6050 Fax.:(508)351-6044
Toll free: 1-800-818-1318

Web Site
www.ipl-packaging.com